Ver.26950

EMFLOW
EST.2002

ELECTRIC ROTARY ACTUATORS

CATALOGUE

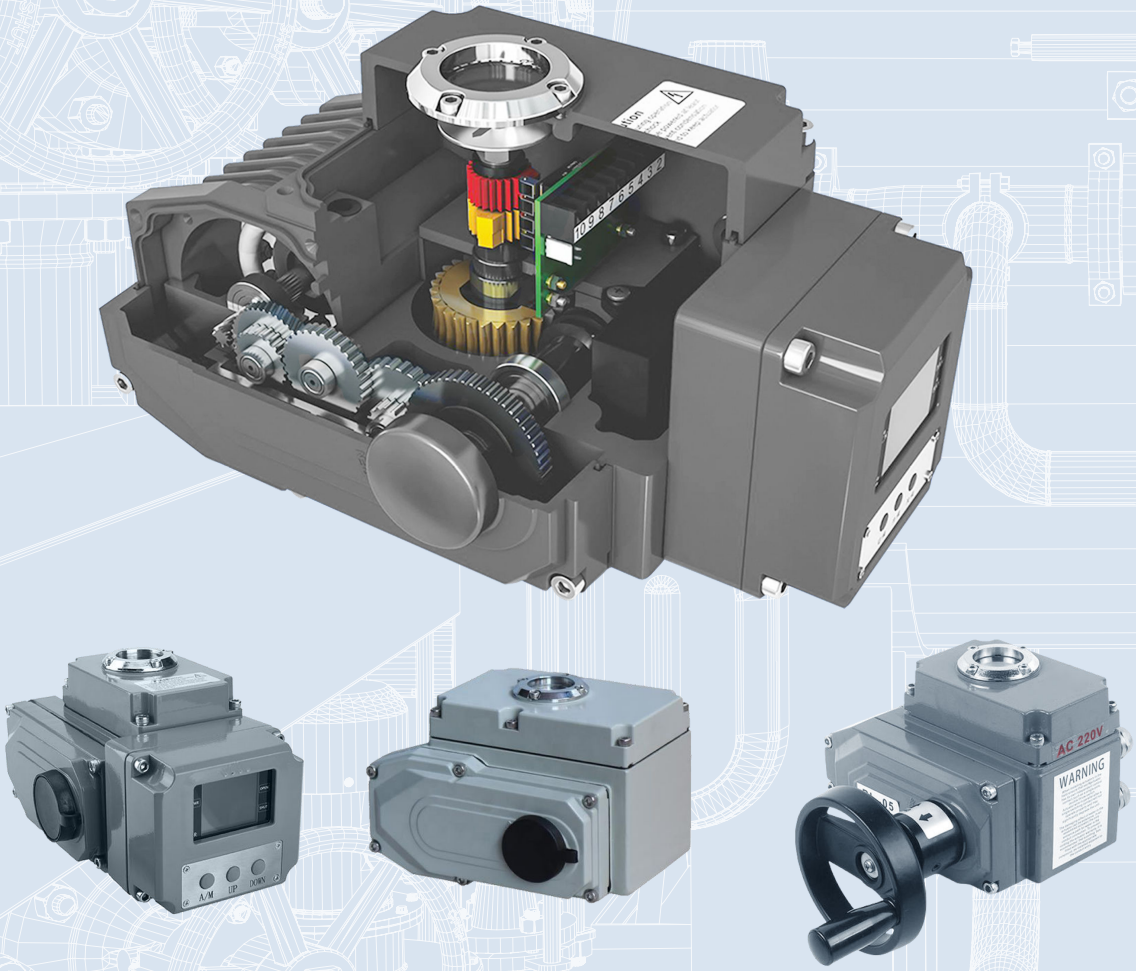

EM-FLOW ENVIRONMENTAL TECHNOLOGY CO., LTD.
www.emflow.tw

EME SERIES

COMPACT ELECTRIC ACTUATOR

Product Description

EMP series electric actuator is with unique design, It can be used to control the 0°— 270° rotary valve or and other similar products, such as butterfly valve, ball valve,air valve, flapper valve, plug valve, louver valve, etc. It can be widely used in petroleum, chemical industry, water treatment, shipping, paper making, power station, heat supply, building automation, light industry and other areas. With AC220V/AC380V/DC24V driving power supply, the actuator can make the valve movement to the required position by 4-20 ma current signal or 0 to 10 v DC voltage controlling signal. The maximum output torque is 4000 N-M. An indisputable advantage that will impress you.

Performance Characteristics

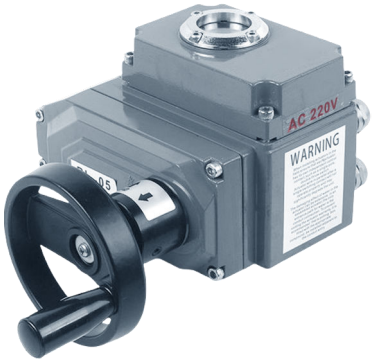



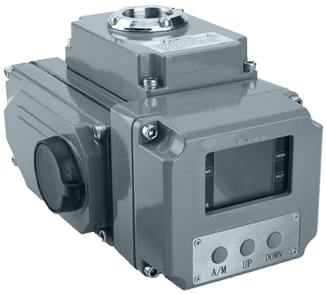



- With hard aluminum alloy material, the size of the housing is small. The housing is with strong corrosion resistance after anodizing treatment and polyester powder coating, the surface is fine and smooth, which can reduce electromagnetic interference.
- The fully enclosed squirrel cage motor is with futures as small volume, large torque, small inertia force. F-class insulation and built-in overheat protection switch, which can prevent motor damage from over heating. Anti-corrosive and nustproof, all screws are of stainless steel material.
- With portable allen key, with which you can manually operate the actuator when power failure. On the surface of the actuator, there is a clamp to lay the allen key, so you can find it when you need it.
- The Indicator is mounted on the central actuator to observe the valve position, it is designed with convex lens, the water will not accumulate, and it is more convenient to observe.
- With space heater, which will help to keep the inner components and parts in a dry condition even in raining and wet whether.
- With good sealing structure. The integrated design of warm gear and output shaft avoids the gap of key connection. It is with high transmission precision With special copper alloy forging, which is with high strength and good abrasion resistance features.
- With both mechanical limit and electronic limit. The mechanical limit screw is adjustable. safe and reliable: The electronic limit switch is controlled by the cam mechanism. The simple adjustment mechanism can set the position accurately and conveniently, and it is not affected by over adjusting of the handwheel.
- The precision worm gear and worm mechanism can efficiently transmit large torque with higher efficiency, lower noise and longer warking life. With self-locking function. to prevent reversal. The driving parts are more stable and reliable, no need to add lubrication.
- Protection design: when removing the shell, the bolt is attached to the shell and will not fall off.
- The mounting dimensions of the bottom meets the international standards of IS05211/ DIN3337, With double square threaded hole to facilitate with square bar valve linear or 45 angle of installation, with strong adaptability, It can be installed either vertically or horizontally.
- The control circuit is with single-phase or three-phase power supply standard, The layout of the line is compact and reasonable, the external circuit is also simple, connection terminals for additional functions can be effectively added. Direct-current power supply is also available.
- Intelligent control: the intelligent control module is highly integrated into the body of the electric actuator, no need to connect with external positioner. Digital setting with high precision, self-diagnosis, multi-functions.
- Powerful functions: intelligent type, proportional type, switching type, all kinds of signal output types are available

EME SERIES

COMPACT ELECTRIC ACTUATOR

EMFLOW EST.2002

Standard Specification

Housing	Aluminium Alloy Die-castings, IP67 water-proof grade, NEMA4 and 6
Motor Power Input	220V AC 1Phase, 380/440VAC 3Phase. 50/60HZ, ±10%, 24V DC
Control Power	110/220V AC 1Phase 50/60HZ, ±10%
Motor	Squirrel Cage Asynchronous Motor
Normal Limit Switch	2*On/Off, SPDT, 250C AC 10A
Auxiliary Limit Switch	2*On/Off, SPDT, 250C AC 10A (0-270")
Stroke	90°-270°±10°(please inform us if the angle is above 90°)
Stalling Protection/ Operation Temperature	With Inner Thermal Protection Function, On (120°C±5°C)/Off (97°C±5°C)
Indicator	Continuous position indicator
Manual operation	Manually operate with allen key (hand wheel is optional)
Self-locking device	Self-lock Design
Mechanical limit	With 2 External adjusting bolt
Space heater	7-10W (110/220V) AC (to prevent condensation)
Conduit entry	With 2 x M18*1.5
Ambient temperature	-25°C-60°C
Lubrication	Molybdenum base grease (EP type)
Material	Steel, aluminum, aluminum bronze, polycarbonate
Ambient humidity	90%RH (Max)
Anti-vibration	XYZ10g. 0.2-34Hz, 30Minutes
External coating	Dry powder, epoxy polyester (non condensation)

EME SERIES

COMPACT ELECTRIC ACTUATOR

Product Advantages

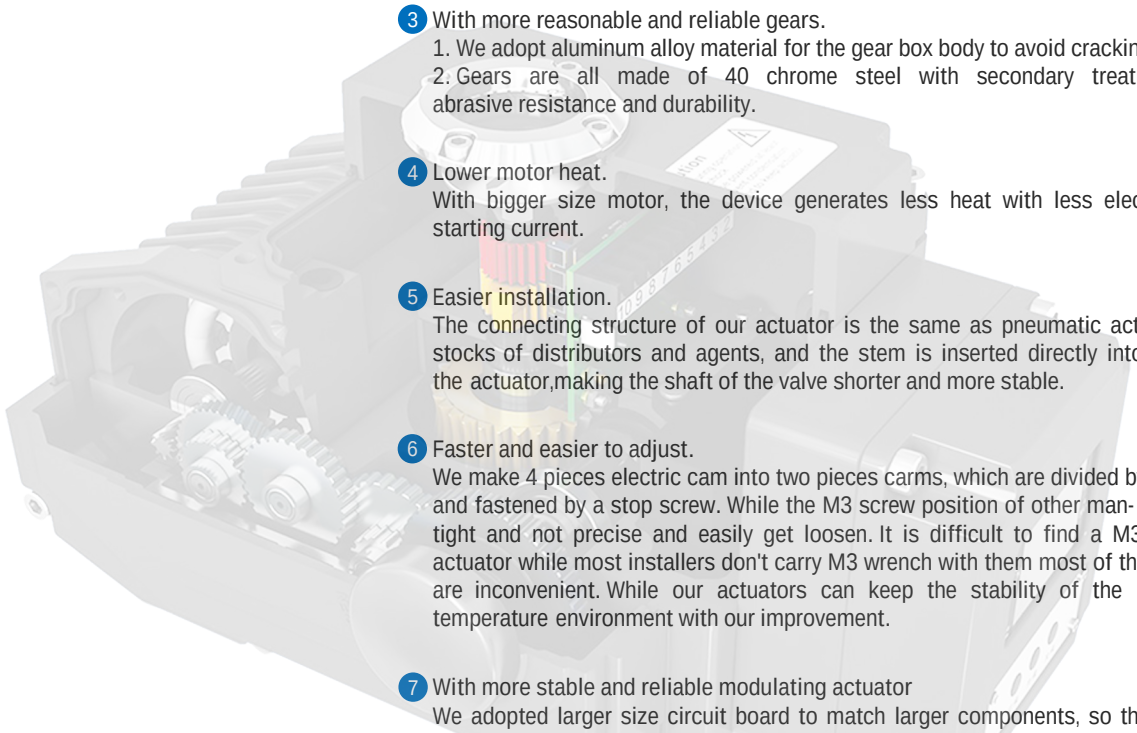

1. Protection grade IP68.
   Designed with more reasonable embedded structure, the housing is with better leakproofness.

2. Perspective structure.
   With perspective glass, it is easier to see the internal status. We adopt mechanical seal structure instead of chemical adhesive seal structure. The chemical adhesive seal actuator's waterproofness will decrease for aging (especially in high temperature and high pressure circumstances). While mechanical seal structure device could be installed in outdoor, it can even work under water for some time.

3. With more reasonable and reliable gears.
   1. We adopt aluminum alloy material for the gear box body to avoid cracking
   2. Gears are all made of 40 chrome steel with secondary treatment. With better abrasive resistance and durability.

4. Lower motor heat.
   With bigger size motor, the device generates less heat with less electric capacity and starting current.

5. Easier installation.
   The connecting structure of our actuator is the same as pneumatic actuators, it reduces stocks of distributors and agents, and the stem is inserted directly into the worm inside the actuator,making the shaft of the valve shorter and more stable.

6. Faster and easier to adjust.
   We make 4 pieces electric cam into two pieces carms, which are divided by belleville springs and fastened by a stop screw. While the M3 screw position of other man- ufacturers are not tight and not precise and easily get loosen. It is difficult to find a M3 wrench for their actuator while most installers don't carry M3 wrench with them most of the time. M3 screws are inconvenient. While our actuators can keep the stability of the limit in ultra low temperature environment with our improvement.

7. With more stable and reliable modulating actuator
   We adopted larger size circuit board to match larger components, so the actuator is with higher power. As we use weak current control power supply, it will not affect the module performance for voltage instability. We use bare board which is with better heat dissipation, User friendly, one key positioning, to avoid misoperation or debugging disorder for too many buttons. The Intelligent machule external mounting is used to solve the problem that the maximum temperature of actuator is 120 °C. while the temperature of electronic components of module is only 65 °C.

EME SERIES

COMPACT ELECTRIC ACTUATOR

EMFLOW EST.2002

EME-003 Series

Dimensions and Performance Parameters

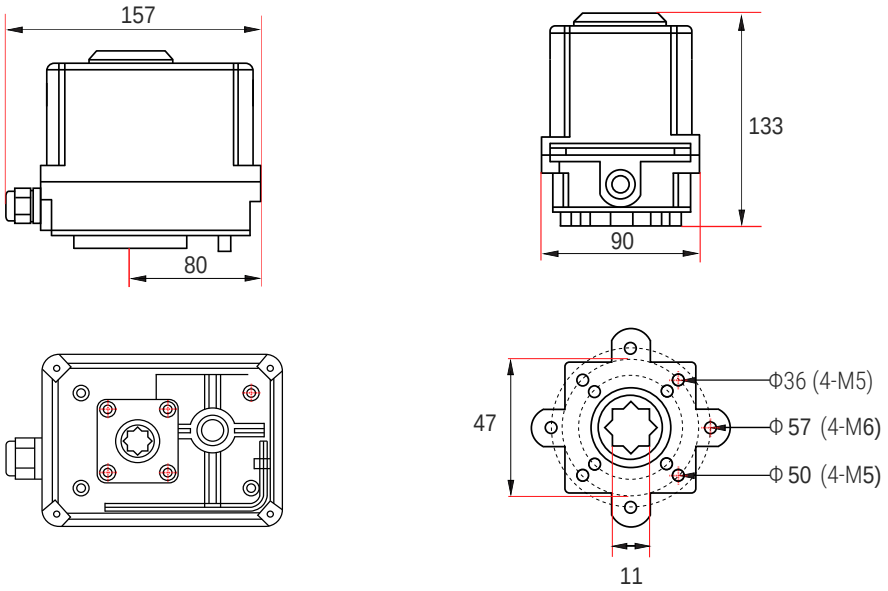

Model Name	EME-003
Input Voltage	AC220V/DC24V
Motor Power	20W/2W
Rated Current	0.2A/0.15A
Output Torque	30NM
Operating Time	5S - 15S
Output Shaft	Square hole: 11*11/14*14, Depth: 15/18; Round hole: Φ12.6, Depth:26
Control Circuit	B-type/S-type/R-type/H-type/A-type/K-type/D-type/T-type
Operation Angle	0~270°
Weight	1.5kg
Dielectric Strength	1500VAC/Minute
Insulation Resistance	100MΩ/500VDC
Working Temperature	-25°C~60°C (Other temperature can be customized)
Installation Angle	360° Any Angle
Housing	ABS/IP67
Optional Function	Over torque Protection, Heat Dehumidifier
Ball Valve	15~25
Butterfly Valve	40~50

EME SERIES

COMPACT ELECTRIC ACTUATOR

EMFLOW EST.2002

EME-005 Series

Dimensions and Performance Parameters

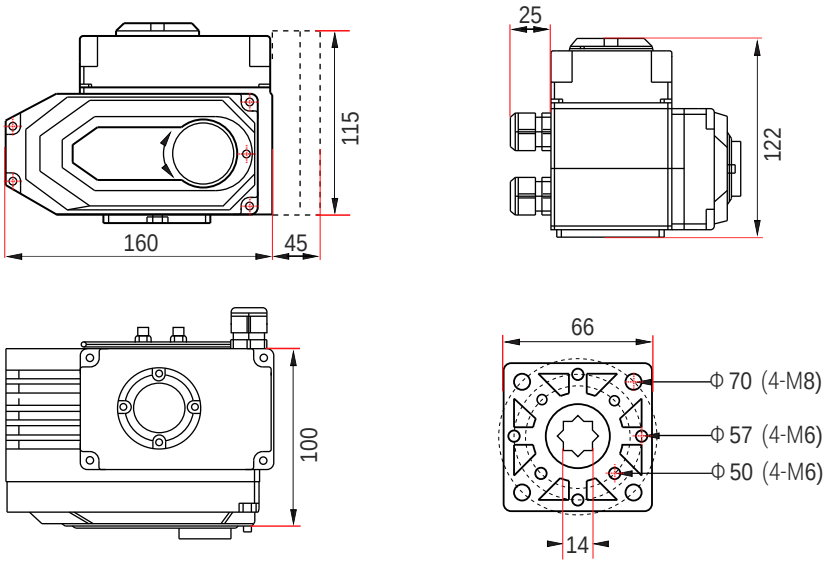

Model Name	EME-005
Input Voltage	AC220V / AC380V / DC24V
Motor Power	12W
Rated Current	0.22A / 0.1A / 0.2A
Output Torque	50NM
Operating Time	30S
Output Shaft	Square hole: 11*11/14*14, Depth: 15/18; Round hole: Φ12.6, Depth:26
Control Circuit	B-type/S-type/R-type/H-type/A-type/K-type/D-type/T-type
Operation Angle	0~270°
Weight	3.5kg
Dielectric Strength	1500VAC/Minute
Insulation Resistance	100MΩ/500VDC
Working Temperature	-25°C~60°C (Other temperature can be customized)
Installation Angle	360° Any Angle
Housing	Aluminium Alloy Die-castings, IP67 water-proof grade, NEMA4 and 6
Optional Function	Over torque Protection, Heat Dehumidifier
Ball Valve	15~50
Butterfly Valve	50~80

EME SERIES

COMPACT ELECTRIC ACTUATOR

EMFLOW EST.2002

EME-010/015 Series

Dimensions and Performance Parameters

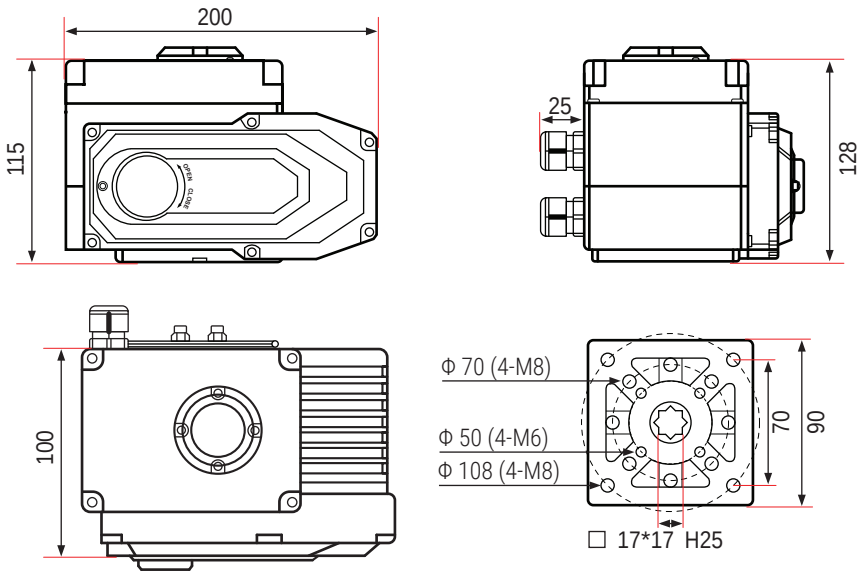

Model Name	EME-010	EME-015
Input Voltage	AC220 / AC380V / DC24V	AC220 / AC380V / DC24V
Motor Power	25W	35W
Rated Current	0.3A / 0.15A / 2.5A	0.38A / 0.2A / 5.0A
Output Torque	100NM	150NM
Operating Time	30S	40S
Output Shaft	Square hole: 14*14/17*17 Depth: 18/32; Round hole: Φ 15.7/Φ 18.95, Depth: 28	
Control Circuit	28 B-type/S-type/R-type/H-type/A-type/K-type/D-type/T-type	
Operation Angle	0~270°	
Weight	4.7kg	5.0kg
Dielectric Strength	1500VAC/Minute	
Insulation Resistance	100MΩ/500VDC	
Working Temperature	-25°C~60°C (Other temperature can be customized)	
Installation Angle	360° Any Angle	
Housing	Aluminium Alloy Die-castings, IP67 water-proof grade, NEMA4 and 6	
Optional Function	Over torque Protection, Heat Dehumidifier	
Ball Valve	15-65	15-80
Butterfly Valve	50-100	50-150

EME SERIES

COMPACT ELECTRIC ACTUATOR

EMFLOW EST.2002

EME-020/050 Series

Dimensions and Performance Parameters

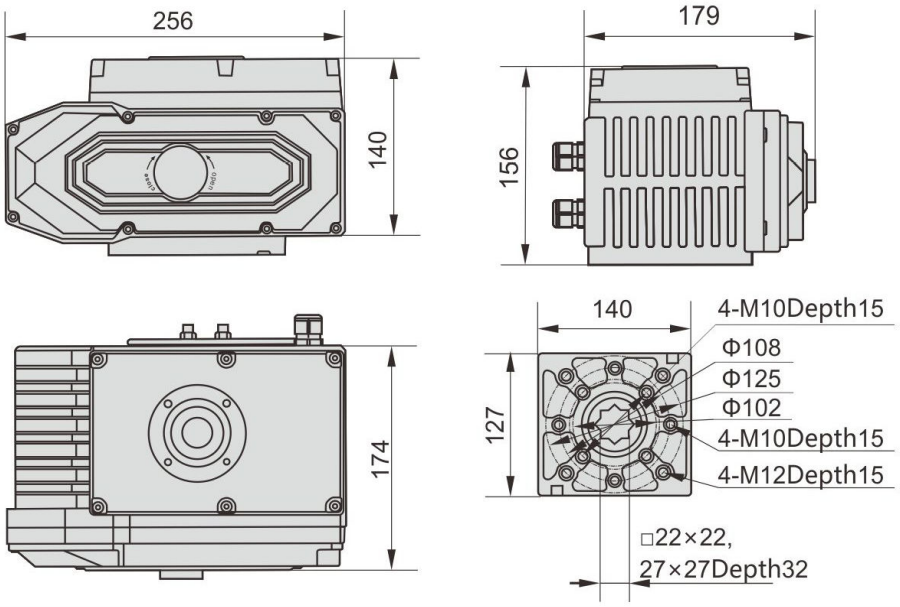

Model Name	EME-020	EME-050
Input Voltage	AC220V / AC380V / DC24V	AC220V / AC380V / DV24V
Motor Power	60W	100W
Rated Current	0.5A / 0.25A / 8.5A	0.75A / 0.4A / 8.5A
Output Torque	200NM	500NM
Operating Time	40S	50S
Output Shaft	Square hole: 22*22/27*27, Depth: 32; Round hole: Φ28.5/Φ32.65 Depth: 42Max	
Control Circuit	B-type/S-type/R-type/H-type/A-type/K-type/D-type/T-type	
Operation Angle	0~270°	
Weight	10kg	11kg
Dielectric Strength	1500VAC/Minute	
Insulation Resistance	100MΩ/500VDC	
Working Temperature	-25°C~60°C (Other temperature can be customized)	
Installation Angle	360° Any Angle	
Housing	Aluminium Alloy Die-castings, IP67 water-proof grade, NEMA4 and 6	
Optional Function	Over torque Protection, Heat Dehumidifier	
Ball Valve	80	100
Butterfly Valve	200	250

EME SERIES

COMPACT ELECTRIC ACTUATOR

EMFLOW EST.2002

EME-100/200 Series

Dimensions and Performance Parameters

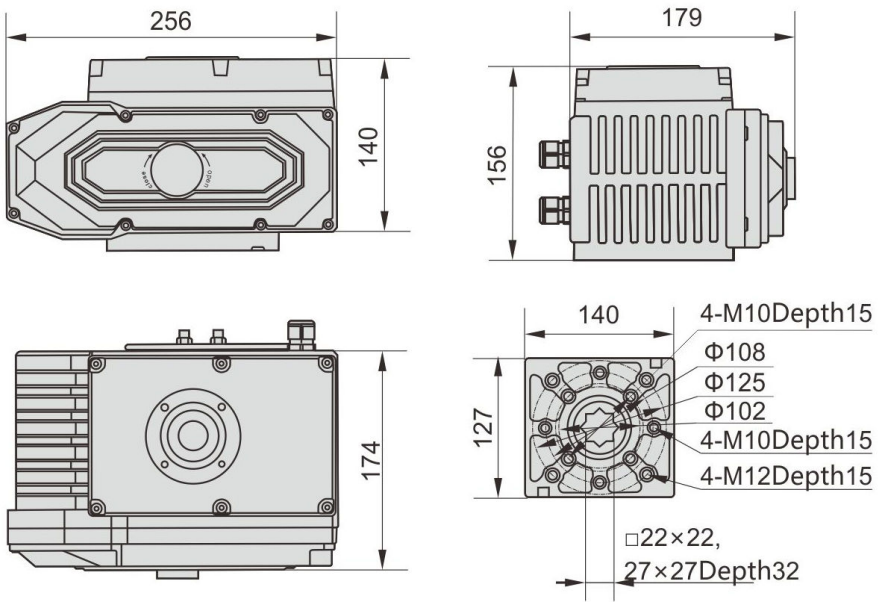

Model Name	EME-100	EME-200
Input Voltage	AC220V / AC380V / DC24V	AC220V / AC380V / DC24V
Motor Power	100W	120W
Rated Current	0.75A / 0.4A / 10A	0.9A / 0.5A / 10A
Output Torque	1000NM	2000NM
Operating Time	60S	60S
Output Shaft	Square hole: 22-22/27*27, Depth: 32; Round hole: $28.5/Φ32.65 Depth: 42Max	
Control Circuit	B-type/S-type/R-type/H-type/A-type/K-type/D-type/T-type	
Operation Angle	0~270°	
Weight	11kg	11.5kg
Dielectric Strength	1500VAC/Minute	
Insulation Resistance	100MΩ/500VDC	
Working Temperature	-25°C~60°C (Other temperature can be customized)	
Installation Angle	360° Any Angle	
Housing	Aluminium Alloy Die-castings, IP67 water-proof grade, NEMA4 and 6	
Optional Function	Over torque Protection, Heat Dehumidifier	
Ball Valve	125	150
Butterfly Valve	300 ~ 350	400 ~ 450

Wiring method and diagram

1. AC 220V - Standard on-off passive contact signal output circuitry

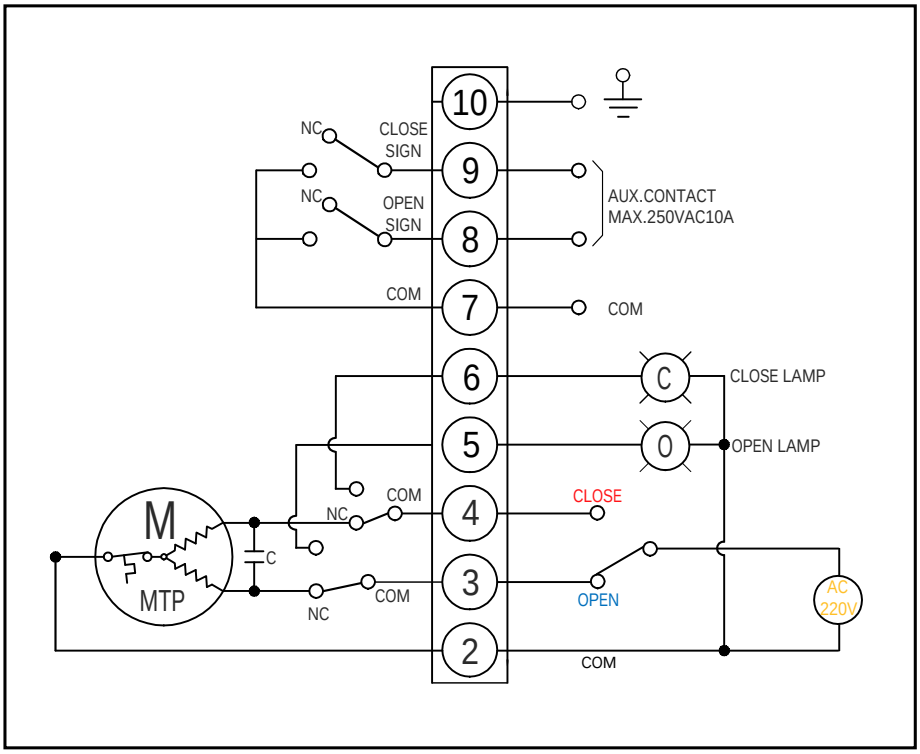

2. DC 24V - Standard on-off passive contact signal output circuitry

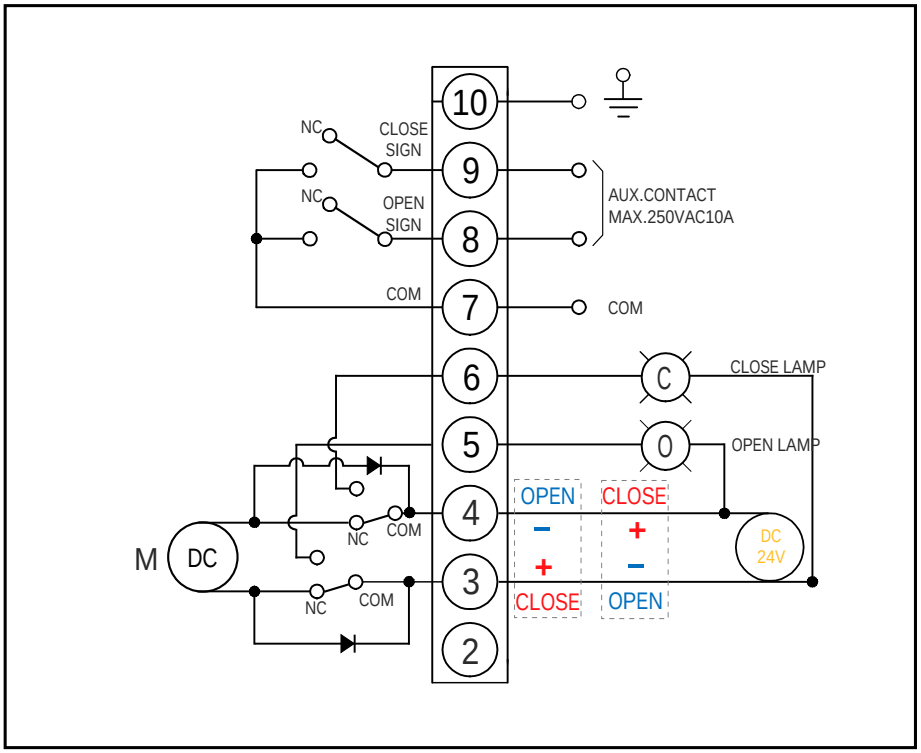

Wiring method and diagram

3. AC 380V - 3 phase passive contact (Outer control on-off model)

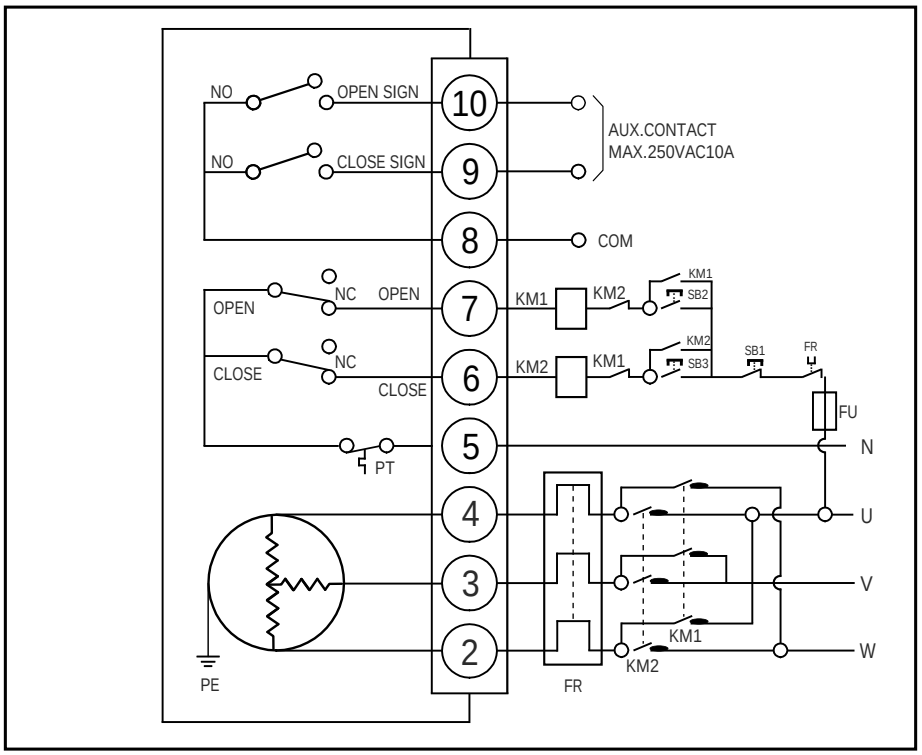

4. AC 380V/220V - DC24V Intelligent Modulating

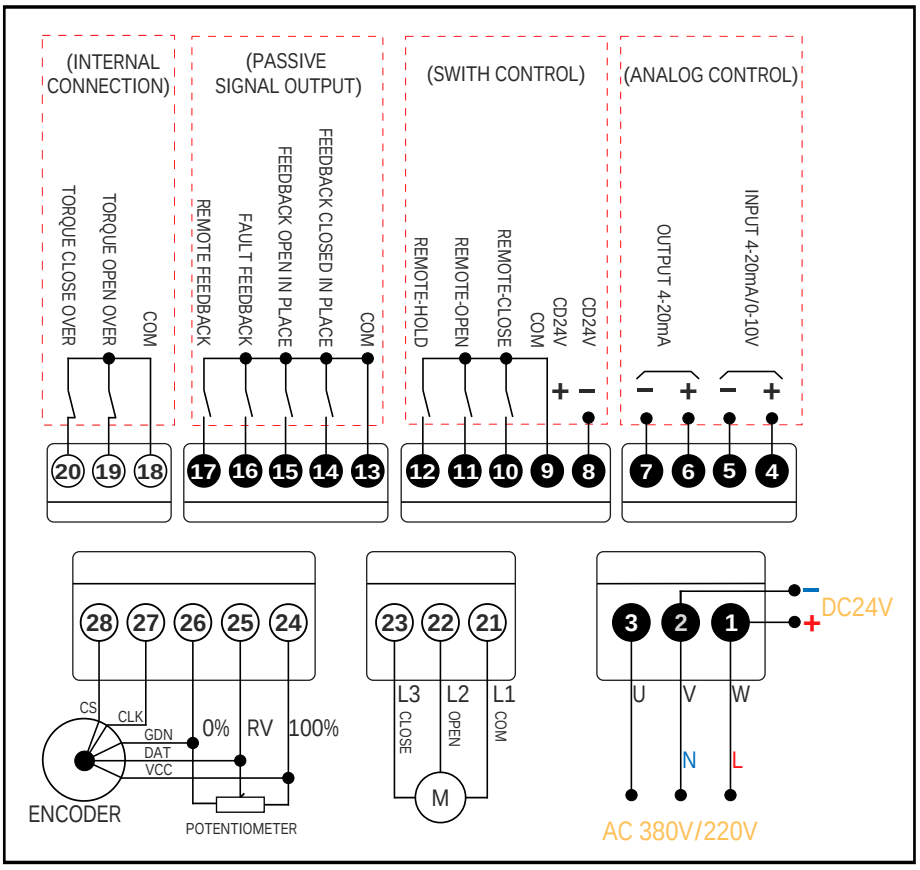

EME SERIES

COMPACT ELECTRIC ACTUATOR

Intelligent Modulating



Main technical specifications

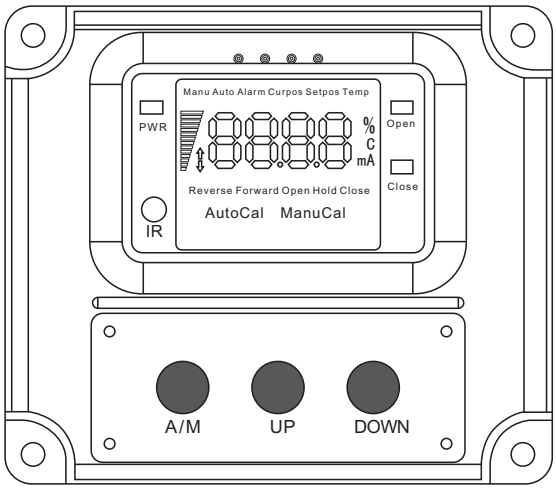

Panel

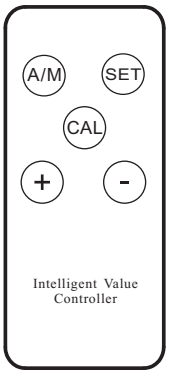

Remote controlled

- Input voltage range: three phase: 342V~418V, single phase: 85V-248V.
- Environment temperature: -40°C~85°C, relative humidity: ≤90RH%, can setting over temperature alarm function.
- Control accuracy: 0.1%~3.0% (can adjust by parameter d).
- Actuator feedback signals: potentiometer 500Ω-10KΩ (can customized before out of factory) Output of the driver motor output of the silicon controlled (1200V AC, 25A).
- Input of the analog signal: control opening signal (DC), 4~20mA (0~5V, 0-10V, default value can customized before out factory), input resistance: 250Ω.
- Feedback of the analog signal: feedback of the valve current opening signal: 4-20mA Dc (0~5V, 0~10V, default value can customized before out factory), the maximum load capacity ≤ 500Ω (2000V surge voltage).
- Input of switching signal: 3 channels input signal of photoelectric isolated control (remote on, off, keep) with built-in 24V control voltage.
- Feedback of switching signal: feedback of the relay, including trouble, remote status on position,off position output, load ability 60V/500mA.
- Signal isolation: signals isolate by the relays and optoelectronic couplers, the isolation can up to 2000V.

Chassis size:

10-10 actuator rear cover Size: 104mm*92mm*35mm
20-20 actuator rear cover Size: 115mm*97mm*35mm
30-30 actuator rear cover Size: 114mm*100mm*35mm

Structure

The electric actuator consists of the following parts:

- Shell part: including shell and base part;
- Drive part: high-performance fully enclosed squirrel cage motor as the power source;
- Drive mechanism: Worm gear and gear drive part;
- Proportional control part: separate from the mechanical part, easy to debug;Limit switch part;
- Open detection and feedback parts.

Installation

Precautions for indoor installation:

- This is non-explosion-proof product, please do not install in places with explosive gas;
- Please inform in advance if needs to install under water or in outdoor areas;
- Please reserve the space for wiring, manual operation and maintenance.

Precautions for outdoor installation:

- To prevent the product from raining, direct sunlight etc., please install with a protective cover,or use our protection grade IP68 products.
- Please reserve the space for wiring, manual operation and maintenance.

Ambient Temperature and Fluid Temperature

Ambient temperature

- The environment temperature should be at 25°C+60°C;
- When the ambient temperature is below zero, please inform us to add a space heater in the machine.

Fluid temperature

- When coupled with valves, heat from the fluid will be transferred to the body though in the conjunction and the body temperature will increase.
- When the fluid temperature is extremely high, the mount part between the valve and actuator should be specially treated.
- Standard bracket: When the fluid temperature is below +65°C (Or no need bracket)
- Middle Temperature bracket: When the fluid temperature is more than + 65°C
- High temperature bracket: When the fluid temperature is above + 180° C

Connection with Valves

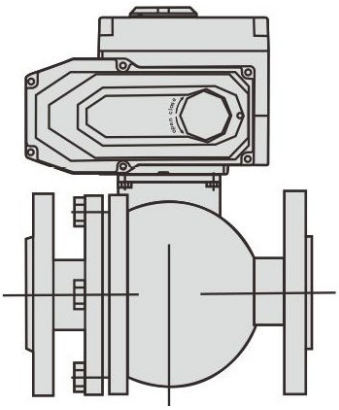

- Manually turn the valve, confirm there is no abnormal condition and turn it to the fully closed position.
- Fix the bracket on the valve.
- Put the electric actuator on the bracket and screw it gently with bolts and nuts.
- Turn the electric actuator to the closing position, and fix the valve shaft and the electric actuator output shaft with the coupling and screw.
- Screw on the bolts between the electric actuator and the bracket.
- Use the handle to rotate the electric mechanism, make sure no eccentricity, bending, smooth movement, pay attention not to over travel

Note: Decrease hysteresis of the coupling as far as possible

When installing, take care to match the actuator switch in line with the valve switch. The flange at the bottom of the actuator complies with the ISO5211 standard. If the connected valve also conform this standard, it can be easily connected, if not, additional bracket connection is required

Debug Description

Adjustment of stroke limit

Turn round the handwheel to move the actuator to the fully closed position. Then use a wrench to loosen the limit cam fixing nut. Turn the limit cam (yellow open, red close) to adjust it to just press the lower limit switch (CLS) position, and then fixed the limit cam nut, so it is the way to set the position of the travel limit when the actuator is fully closed. The position of full open is set in the same way.

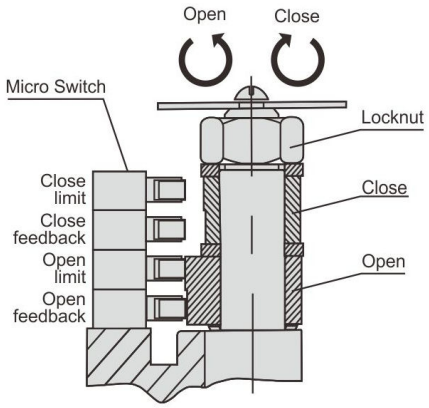

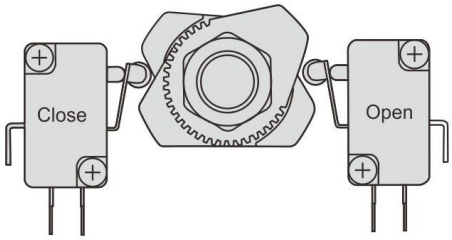

Adjustment of mechanical limit

Loosen the lock nut of the mechanical limit screw and manually move the actuator to the fully closed position. Set the rotation limit nut, when it hits the fan gear inside, stop rotating and spin two circles, Finally tighten the nut, this sets the position of the mechanical limit when the actuator is fully closed. Full open position can be set in the same way, as shown in picture 4

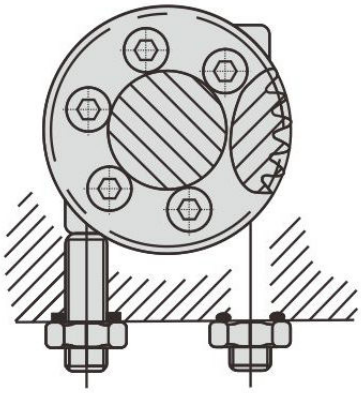

Adjustment of Potentiometer

The potentiometer is output as a feedback signal in the actuator and has three output terminals.

- No.❷ connect with slide arm of potentiometer,
- No.❶ connect with the terminal, which resistance between slide arms constantly decrease, when the actuator is opening action,
- No.❸ connect with the terminal, which resistance between slide arms constantly decrease, when the actuator is closed action

(Note: the potentiometer resistance should be not over-zero, jump phenomenon) Rotating the valve to the full-open position by handle, as per open to limit switch closed action, measured with a multimeter to adjust the resistance between ❷ and ❶ side to 35Ω- 60Ω, if not correct, can be adjust by turning the potentiometer drive gear of potentiometer.

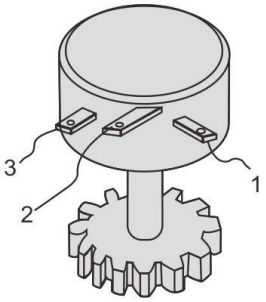

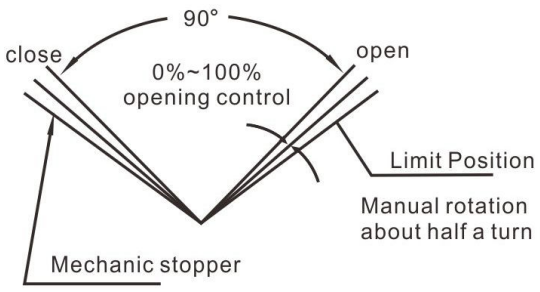

Running Test

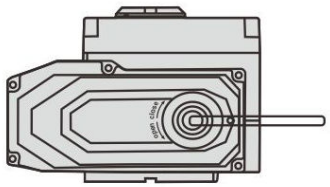

Manual operation

When manual operation is carried out, the power must be cut off first, the rubber cap of the deceleration cap must be removed, the attached handle should be inserted into the hexagonal hole, and the manual handle should be rotated clockwise to reduce the opening degree.

Note:

When the opening degree turns to the fully open and fully closed position, the limit switch will rotate another half turn. It will hit the mechanical block, and excessive rotation will lead to damage to other parts, so avoid excessive force.



Electric operation

- Before electric operation, manually check whether the opening meter and valve Angle(full open and full close) are consistent.
- Check whether the wiring is correct, and at the same time, use an external switch to confirm the opening and closing action.
- After confirming the above state, start electric operation

Note:

- Check wiring diagram, power supply, input/output signal correct
- Don't change the internal wiring
- If the power supply is 3phase, it should be checking the rotation direction
- Manually put the actuator in half-open/close position, power on and input the open signal
- If the electric actuator runs to the open position it means the wiring is correct
- If the running direction is opposite, we must change 2 power lines among the 3 power lines

Maintenance

Lubrication

Special Mo-base grease with long service life and good pressure resistance, so it do not need to refuel.

Regular operation

When the valve works less, the machine can be driven regularly to check whether there is any abnormal situation.

Note:

Please refer to the debugging instructions of the control module part for the analog adjustment type actuator

Personalized Functions of Electric Actuators

- The full opening and closing time of the valve is 2.8s-8s (optional) for some quick operation conditions
- Working under the water in short time, it's used for working situation which the electric actuator is immersed in the water sometimes
- The valve move fully open or fully closed slowly, the actuator is enable to rotating the valve 90° achieve 650s
- Manual operation can be used with clutch hand rotation mechanism
- It's provided with the site, local/remote switching function
- It's provided with DC12V, DC24V, DC110V, DC220V, AC24V, AC110V, AC380V

Note:

Other unknown or special specifications, please contact with Technology Department of our company

EMFLOW

EST.2002

EM-FLOW ENVIRONMENTAL TECHNOLOGY CO., LTD.
Add: 29/F, No.68, Section 5, Zhongxiao East Road, Taipei City, Taiwan+886 961
Tel: +886 961-612-974
E-mail: sales@emfow.tw
www.emflow.tw